DESIGN, FABRICATION AND TESTING OF COCONUT MILKING MACHINE

by

Bello, K. I.; Balogun, A. L. and Lamidi, B. O.

Department of Agricultural and Bio-Environmental Engineering
Institute of Technology, Kwara State Polytechnic Ilorin, Nigeria

Abstract

The traditional method of milk extraction from coconut is tedious, time consuming and inefficient. There is need to improve the method of milk extraction by using machine to extract milk from coconut. The coconut milk extracting machine was designed, fabricated and evaluated for performance. The extracting machine consists of the following components: hopper, frame, worm shaft, two cylindrical barrels, milk outlet and cake outlet. The factors considered in this experiment were machine speed, and time. The performance results reveal that the weight of coconut milk extracted at 200rpm (209.33kg) was relatively the same with that extracted at 300rpm but were significantly higher compared to the other two levels of 400rpm and 500rpm respectively. It can therefore be concluded that for high extraction of coconut milk, lower speed will be required at moderate time of operation.

Keywords: Design, Extraction, coconut milk

Introduction

Coconut (*Cocoa nueifera L.*) has been part of peoples diet and livelihoods in the tropical countries of Asia, the pacific, South and Central America and Africa for thousands of years. In these areas, native meals are cooked with either coconut milk or coconut oil. In the Cook Islands in the South Pacific, particularly Rarotonga Island, slices of fresh, mature coconut kernel are served with fruits after meals. In India, the use of coconut for food and its applications in the Ayurvedic medicine were documented in Sanskrit 4000years ago (Kabara, 2000).

Records show that in the United States, coconut milk was one of the major sources of dietary fat, aside from dairy and animal fats, prior to the advent of the American edible milk (Soybean and corn) industry in the mid 1940s (Dayrit, 2005). The long history of usage and the diverse studies done to characterize and define the composition of the various components of the coconut tree, its fruit and the related products derived from it, established the coconut's uniqueness and superiority among

agricultural crops. Every part of the coconut tree and its fruit can be either consumed by humans or animals or converted into other valuable products. If properly utilized, the coconut has the highest economic value among the palm family. This is why the coconut is normally referred to as the tree of life, man's most useful tree, king of the tropical flora, tree of Abundance (Dayrit, 2005).

Coconut milk is a very important ingredient for food, source of oil, and raw material for pharmaceuticals. The extraction of coconut meat is usually done manually by small industries and mechanically by some medium scale industries. The high cost of mechanical coconut extractors makes small industries turn back to the usual manual means which is time and effort consuming and often times unsanitary because of the direct use of hands. The existing coconut milk extractor makes use of compression as means of extraction. The process does not efficiently extract the coconut milk because of the difficulty of machine to compress small particles of the grated coconut. In order to minimize the laborious involvement in the extraction of coconut milk, high cost of the devices and energy needs hence the driving force for this study (Claudio and Emong, 2007).

The traditional method of coconut milk extraction is associated with numerous problems, such as, time consuming, tediousness and unhygienic products. In the light of the aforementioned problems, there is need to introduce a milk extraction machine that will improve the quality and quantity of coconut milk production. This study was therefore carried out to design, fabricate and test the coconut milk extraction machine for coconut milk production in the rural communities. This would go a long way in improving dietary, alleviating poverty and creating employment for the rural farmers that engage in coconut milk production.

Machine Description and Working Principle

The milk extraction machine consists of the following component parts: hopper, cylindrical barrel, worm shaft, pulley, bearing, milk outlet, cake outlet, and main frame. The frame is the unit of the machine which all other parts of the machine is supported. It is designed of high strength material to be able to withstand vibration.

The hopper serves as a container for holding the coconut meat from which the milk was to be extracted. The worm shaft crush, press and convey the product that comes from the hopper and squeezed out milk from the coconut meat.

The cylindrical barrel made from Galvanized mild steel sheet and comprises of two cylinders, perforated cylinder and non perforated cylinder, the coconut milk outlet which function as the outlet for collecting the coconut milk while the residual cake is collected at the cake outlet.

In operation, the grated coconut is introduced into the machine through the fed hopper the worm shaft of the machine conveys, presses the grated coconut inside the perforated cylinder (barrel) with the aid of the worm shaft until milk is squeezed out of the coconut meat. The milk extracted is drained through the milk outlet where it is collected. The cake is discharge at the cake outlet. Shown in Fig. 1, the machine is powered by a 2 hp single phase electric motor.

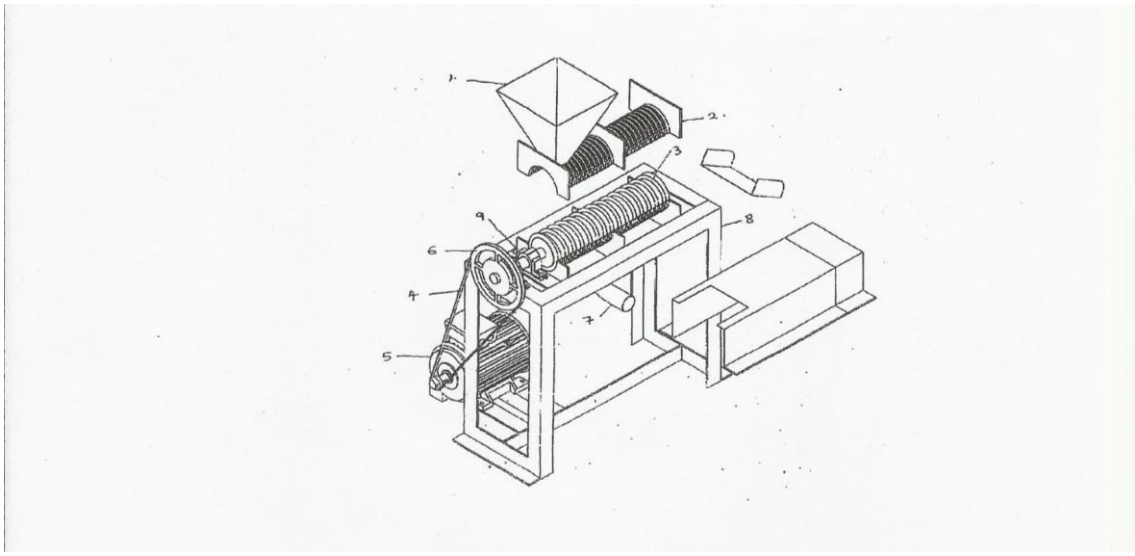

Figure 1: Exploded view of the milk extractor 1-hopper, 2- Barrel, 3- worm shaft, 4- transmission belt,5- electric motor, 6- pulley, 7- milk outlet, 8- frame,9- bearing

Design Consideration and calculation Procedures

Design Consideration

In the design of the machine, the consideration made include high milk yield, high extraction efficiency, low extraction loss, quality of milk, availability and cost of fabrication materials. Other consideration includes the design of the worm shaft to ensure maximum conveyance and pressing of the coconut meat. Consideration was also given to a strong frame to ensure structural stability and strong support for the machine frame. Stainless materials are used as fabrication materials because of the following reasons; hardness to resist abrasion, it is not corrosive, the ability to retain their hardness at high temperature, toughness to withstand any shock load impact. Other design considerations are: pressing time, Moisture content, speed of extraction, contamination, power source and applied pressure

Design Analysis and calculation

Design of Barrel of the Milk Extractor.

Coconut milk expression machine is an important device for milk recovery from coconut crop by splitting and grating in a grater and pressing with coconut milk extractor. Generally, the barrel behaves like a simple pressure vessel – the cylindrical shell, computed on the assumption that the stress is uniform throughout the wall thickness. Thus, circumferential or hoop stress σ_h and longitudinal stress σ_1 is given by:

$$\sigma_h = \frac{f}{tl} = \frac{P_{r\,l}}{tl} = \frac{P_r}{t}$$

Were, f =hoop force (N), $t =$ thickness of the barrel wall (m), $l =$ length of the barrel wall (m), P =intensity of the internal pressure (N/m^3), r =internal radius of the barrel wall (m).

Design for the Power Requirement of the Machine

The power required by the machine for extracting milk from the coconut was calculated using equation adapted from Ajao et al. (2009) as:

The torque T (in Nm) transmitted by worm action and the angular velocity ω (in rad/s) is given by

$$\omega = \frac{2\pi N_w}{60} \quad (2)$$

and $T = \frac{P}{\omega} = \frac{60P}{2\pi N_w}$ (3)

Therefore equation (2 and 3) becomes:

$$P = T\omega \quad (4)$$

where $P =$ power transmitted by the worm action (W), $N_w =$ no. of rev/min of worm action(rev/min).

Design for the Pulley of the Machine

The pulley was designed by considering the power to be transmitted between the electric motor and the screw extractor shaft. The ratio of the pulley for the electric motor to that of the extractor shaft was 1:5 and the pulley diameters were calculated as by Khurmi and Gupta (2004) as: $N_1 D_1 = N_2 D_2$ (5)

where, $N_1 =$ Speed of the electric motor (rev/min), $N_{2=}$ Speed of the extractor shaft, $D_1 =$ diameter of the electric motor(m), $D_{2=}$ diameter of the extractor pulley (m).

Design for the approximate length of Belt

For our analysis, the belt speed V (m/s^2), and its total length L (m) were calculated as given by Khurmi and Gupta (2004) as:

$V = \pi N_1 D_1$
6
and $L = 2C + \frac{\pi}{2}(D_1 + D_2) - \frac{D_2 - D_1}{4C}$
7
where $C =$ center diameter (m)
for the center diameter,
$C = \left(\frac{D_2 + D_1}{2}\right) + D_1$
8
The shaft, made from cast iron carried combined load of bending moment and torque is given as:
$\tau_{max} = \frac{16}{\pi d^3}\sqrt{(M^2 + T^2)}$
were $\tau_{max} =$ maximum shear stress (N/m), $T =$ torque (Nm),$M =$ bending moment of shaft (Nm), $d =$ shaft diameter of the extractor machine (m).

Materials Selection and Components Fabrication

Fabrication was carried out at the Department of Agricultural Engineering and Bio – Environmental Engineering, Kwara State Polytechnic, Ilorin, Nigeria. Fig. 2 shows the orthographic view of the Coconut milk extractor. The hopper serves as a container for holding the coconut meat from which the milk was to be extracted. The hopper is made of stainless steel of 1.5mm thickness. It has upper part to be 250mm, lower part to be 70mm, and height of 300mm. The barrel for coconut milk extractor was fabricated from Galvanized mild steel sheet with perforated material (mesh) of 120mm in diameter, 170mm length and 3mm thickness and the second cylinder (housing) with 210mm in diameter, length of 440mm and 1mm thickness. The worm shaft was made of solid stainless rod of length 580mm and tapered at 98mm diameter. The rod was wrapped with 12mm thickness stainless steel rod. The coconut milk outlet is made of stainless hollow pipe of 50mm diameter and 3mm thickness welded to the bottom of the second cylinder. The main frame was made from an angle iron of dimension 45 x4 5 x 4 mm. which was cut to the required dimensions and welded together. Fabrication process included marking out, machining, cutting, joining, drilling and fitting. The workshop tools and machines used included: scriber, steel rule, compass and centre punch, treadle-operated guillotine for cutting and welding machine for joining. The specification of construction materials is shown in table 1.

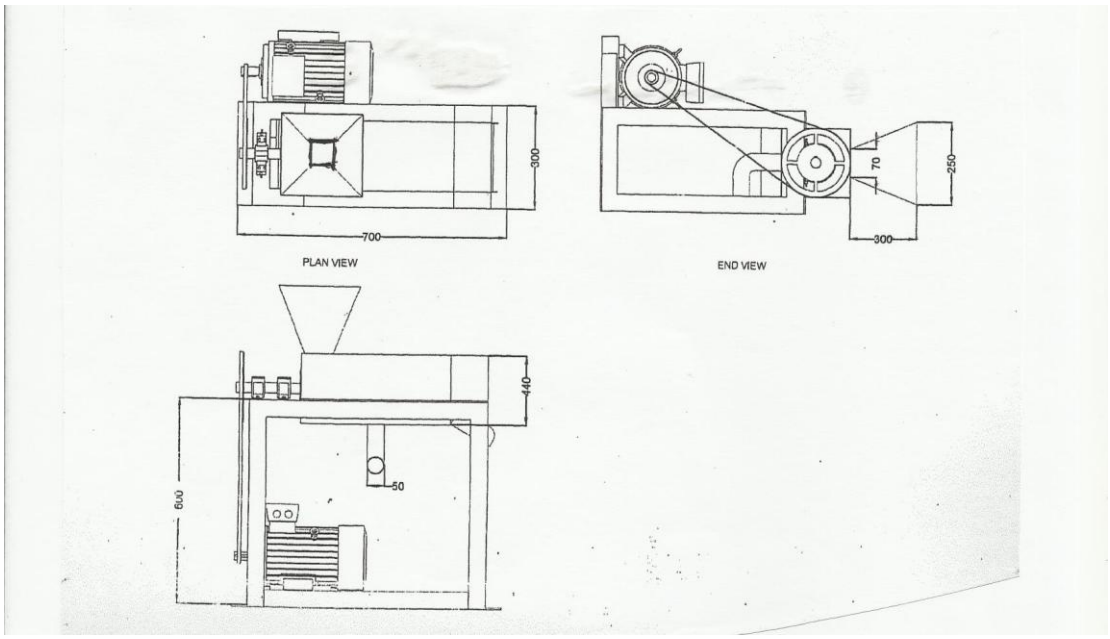

Materials and Methods used for Performance Test

Coconuts were purchased from a local market at Oja oba in Ilorin Kwara State. The fruits were clean, split, grated and ready for extraction. The machine was run at no load in preparation fo the experiment. The known weight of the coconut meal was fed into the milk extractor. After the extraction of the milk, the data obtained were subjected to statistical analysis.

Coconut undergo various processing in the course of its preparation for extraction. Fully matured nuts (plate 4) was selected and weighed about 1.4kg. since the coconut were of different sizes. The weight varies between 0.9 – 1.4kg and it was split and grated manually and weighed to be 2.4kg. The grated coconut meal was then extracted by using milk extraction machine. The milk extraction was done when the moisture content of the coconut is relatively high, the titration of the milk is done using a three layered filter cloth bay and the milk was then packaged.

Preparation of Materials

Coconut milk undergo various processing in the course of its preparation for extraction. Fully matured nuts (plate 4.1) was selected and weighed about 1.4kg. Since the coconut were of different sizes. The weight varies between 0.9 Preliminary test was taken place at agricultural workshop during the experiment and the equipment used to perform the experiment are weighing scale, stop watch sieve bucket, bowl, four (4) different pulley and four different belt

The speed of the machine used for this experiment were varied at four (4) levels of speed 500rpm, 400rpm 300rpm, 200rpm, to determine the appropriate speed for the machine to produce good result.

The Time taken for this experiment was selected base on literatures search. Four (4) levels of time considered were t_1 = 5min, in = 10min, t_3 = 15min t_4 = 20min.
The digital stop watch was used to obtain the time selected.

Output parameters

The data collected from the output of the milk extracting was analysis based on the following output parameters.

$$Extraction\ efficiency\ (by\ theoretical) = \frac{(tactual)}{to} x\ 100\%$$

$Where\ in$

$t\ actual\ for\ without\ mixture\ of\ water$

$$t\ actual = \left(\frac{W_1}{6}\right) = weight\ actual\ coconut\ milk\ extracted$$

$to = in\ every\ 100 grams\ of\ coconut\ meat\ it\ contains\ 63.7\ liquld.$

= it was based on the audile from http://www ahorticulture.com/coconut 1.htm which states that the idea milk can be extracted in every 100grams of mature graced coconut meat is 63.7grams

$W_1 = weight\ of\ coconut\ milk\ that\ was\ extracted\ in\ the\ treatment.$

$t\ actual\ for\ with\ mixture\ of\ water\ (cold/hot) t\ (actual = (W_1 - X_1)$

$W_1 = grams\ of\ wate\ that\ was\ added\ (cold/hot)$

$+\ 600g\ of\ grated\ coconut\ meal\ to\ be\ extracted$

$X_1 = grams\ of\ water\ that\ was\ added.$

Table 1: Bill of Engineering Measurement and Evaluation

Material description	Material specification	Quantity
Angle iron	45mm x 45mm x 4mm	2 lengths
90mm stainless pipe	450mm	1
Pulley	50mm outer diameter.	1
Ball bearing	NSK6304	2
Stainless Elbow	50mm diameter	1
Stainless mesh	440mm x 3mm thick	1
Stainless plate	1.5mm	1
Stainless steel shaft	30mm diameter	1
Mild steel plate	2mm thick	1
1mm stainless plate	2mm	1
Rod worm	12mm	1
Bolts and nuts	M19 and M13	20
V-belt	A66	2
Stainless welding electrode	Gauge 14	1 packet
Normal welding electrode	Gauge 14	1 packet

Results and Discussion of Performance Test

The factors considered in this experiment were machine speed, and time. The performance results reveal that the weight of coconut milk extracted at 200rpm (209.33kg) was relatively the same with that extracted of 300rpm but were significantly higher compared to the other two levels 400rpm and 500rpm respectively it can therefore be concluded that for high extraction of coconut milk, lower speed will be required at moderate time of operation.

Conclusions

A small scale coconut milk extractor machine was designed, fabricated and tested. The following conclusions were drawn from the study: The result on the effect on time and speed on weight of coconut milk extracted. Time of operation and operating speed were both significant at 5% level. This shows that the mean weight of coconut milk extracted at different levels of time and study were statistically different from each other. It can therefore be concluded that time of operation and operating speed have significant on weight of coconut milk extracted.

References

Amarasiri W. A. (2006) Coconut fat Ceylon med J. 51 (7) 47-57 PMID 1718087.

Ajao,K.R;Ajimotokan,H.A;Okomi,J & Akande,H.F.(2009). Development and Performance Evaluation of a Groundnut Expelling Machine. *New York Science Journal.* 2(6) :77-78.

Bawalan D. D. (2004). Find mission report on coconut processing, integrated Horticulture and nutrition development project. *FAO*, Bangladesh.

Claudio and Emong (2009). Design and fabrication of coconut milk centrifugal obstractor with arster.

Dayrit, C. S, (2005). *The truth about coconut oil* (the drugstore in a bottle). Anvil publishing. Inc passing city: Philiphines.

Dietary (2010). Guidelines for Americans department of health and human services.

Foale M. (2003). The Coconut Odyssey. The Bounteous possibilities of the tree of life furan. Rit. Howard R. P. brusco O. J. Alaupoie P. effect of medium chain length triglyceride on serum lipids. In medium chain triply eerie U Penn Press Pennysyvama 51-61

Kabara J.J (2000): Health oils from the tree of life (Nutrition and Health aspects of coconut oils). Paper delivered at the Asian and pacific coconut community (APCC) coco TECH machine held in Chenna; India.

Khurmi,R.S and Gupta,J.K.(2004). *Theory of Machine*. Eurasia Publishing House: New Delhi,India.